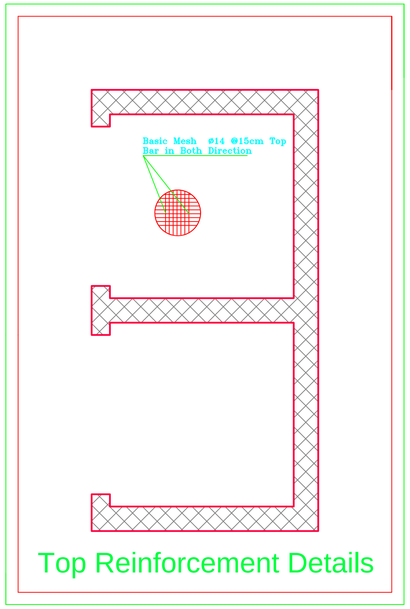

Top Reinforcement Details

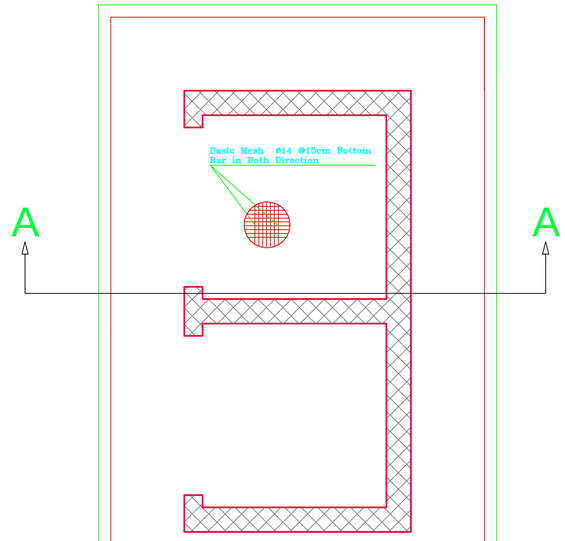

Bottom Reinforcement Details

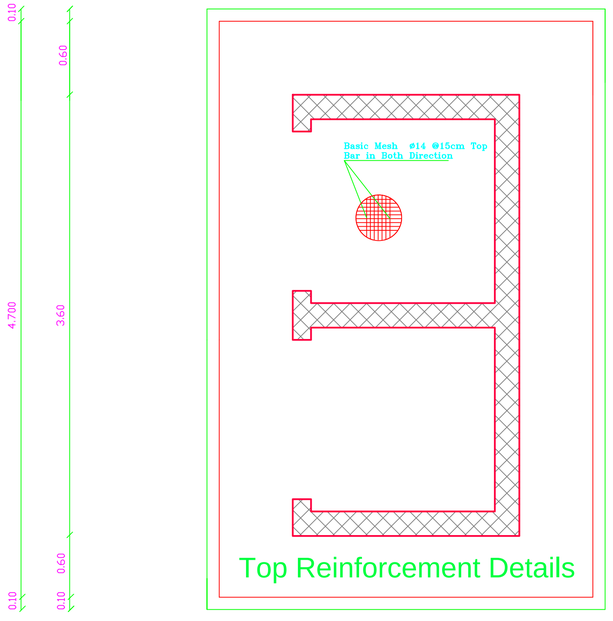

Top Reinforcement Details

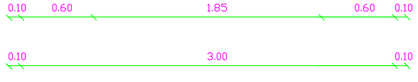

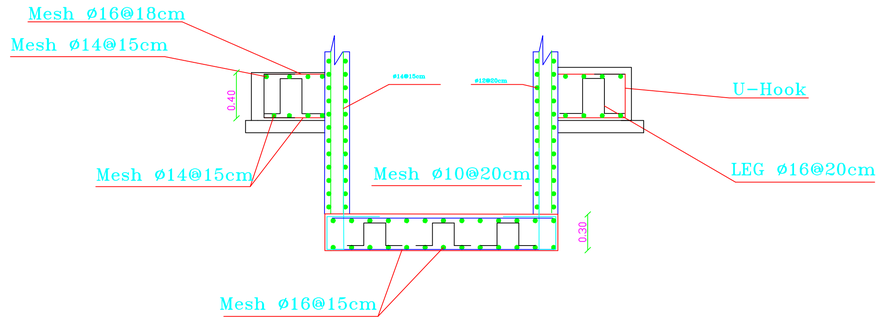

SECTION A–A IN Mat Foundation #1

PALESTINE POLYTECHNIC UNIVERSITY

COLLEGE OF ENGINEERING

CIVIL & ARCH. ENG. DEPARTMENT

BUILDING ENGINEERING

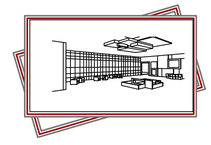

Designed by:

Ihab Talahmeh

Hammada Hosheya

Mahmoud Mahariq

Supervisor:

Dr. Riyad Abdel-Karim Awad

Project:

Dura Woman's Centre

Drawing :

Footing Details

No.:

S 05

Scale:

1:25

Date:

29-4-2018